COMPACT TRACK LOADER
ZT120V

ZOOMLION

COMPACT TRACK LOADER
ZT120V

	Items	ZT120V
Working Performance	Operating Weight	4350 kg
	Rated Load	1210 kg
	Tipping Load	3457 kg
	Standard Bucket Capacity	0.6 m³
	Max. Traveling Speed	14 km/h
	Max. Drawbar Pull	39.9 kN
	Boom Breakout Force	23.1 kN
	Bucket Breakout Force	25.9 kN
Engine	Manufacturer	KUBOTA
	Model	V3307
	Rated Power	53.4 kW / 2400 rpm
	Emission Standard	EU Stage V / Tier 4F
	Displacement	3.331 L
Dimensions	Length	3636 mm
	Length (without bucket)	2878 mm
	Width	1905 mm
	Height	2067 mm
	Departure Angle	30°
	Forward Swing Radius	2307 mm
	Backward Swing Radius	1637mm
	Track Length on the Ground	1556 mm
Operating Range	Max. Operating Altitude	4131 mm
	Dumping Height	2510 mm
	Dumping Reach	980 mm

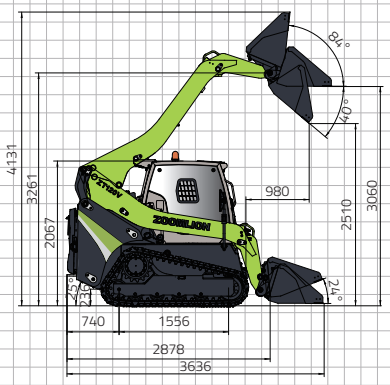

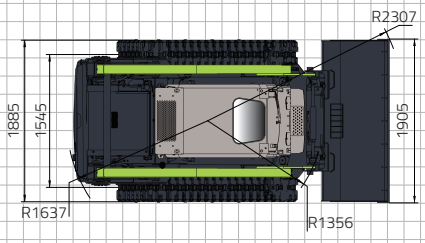

ZOOMLION

Zoomlion Heavy Industry Science & Technology Co.,Ltd.

Add: No.361, South Yinpen Road, Changsha, Hunan Province, P.R.China 410013 Email: earthmoving@zoomlion.com

Copyright©2024 Zoomlion. All rights reserved. Reproduction and copying of any part of contents is not allowed for any purposes without Zoomlion's approval.
Note: Materials and specifications are subject to change without notice. Featured machines in photos may include additional equipment.